A.Y. McDonald Mfg. Co.

AutoDRIVE Quick Start Guide - SD1 & SD3 Series

Step 1 Installation & Mounting

1. Drive must be mounted in an upright position.
2. Minimum of 6" clearance on each side for proper ventilation and the surface around the enclosure should be of a non-flammable material and clear of obstacles.
3. Mounting surface must be sturdy and capable of bearing the weight of the unit.
4. Fasten the unit to the mounting surface using the provided mounting brackets.
5. Use screws or bolts of an appropriate size.

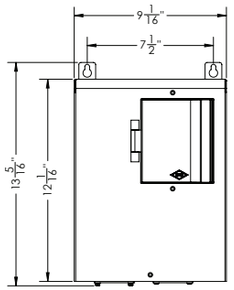

Step 2 Routing Power & Control Cables

Conduit Openings

1. Enclosures are supplied with conduit openings located in the bottom of the enclosure directly beneath the power terminals.
2. Power cables should only enter through the bottom of the enclosure in the area directly beneath the power terminals.
3. It is not recommended to drill holes in other areas of the enclosure for power and control cables.

Warning
Metal filings can cause damage. If you do drill additional conduit openings, clean out filings thoroughly.

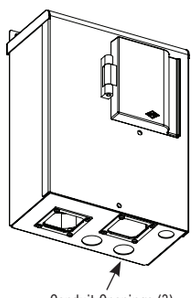

Routing Cables

1. IMPORTANT: Do not install line side power cables in the same conduit or cable tray with load side power cables.
2. Do not route control cables through the same conduit or cable tray as power cables. A separate conduit for control cables must be used. This reduces the exposure of control cables to EMI (electromagnetic interference, or noise) from the motor cables.
3. If the control cables must intersect the power cables, make sure they cross at right angles.

Step 3 Connecting to Power Terminals

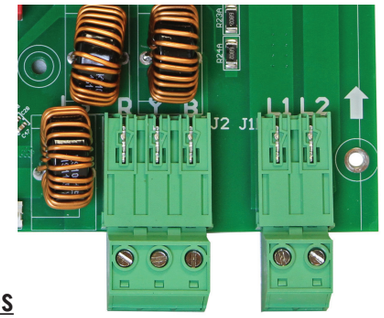

Routing Cables

1. Connect input power source to L1 and L2.
2. Connect output power to R, Y, and B (2-Wire Y and B only)
3. Connect ground wires to ground lug

Note: Power terminal blocks can be removed from the circuit board to make it easier to wire the input and output power

Step 4 Connecting to Control Terminals

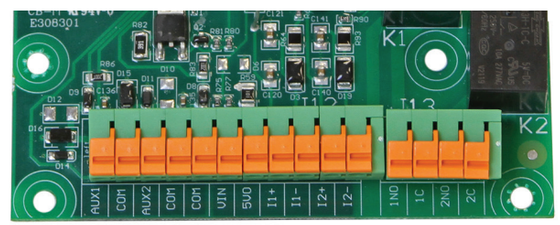

AutoDRIVES are equipped with Control Terminals that allow a number of control functions

1. Digital pressure switch uses ports AUX1 and COM ports
2. Analog Pressure transducers use I_1+ and I_1- ports.

Important Note: The proper System Configuration must be selected for proper operation of the various control systems.

Warning
Do not supply voltage to AUX1 or AUX2 terminals, it may cause damage and void any warranties in place.

continued Step 4 Connecting to Control Terminals

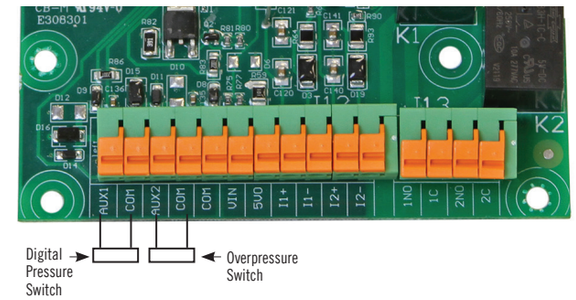

Connection Diagram for Digital Pressure Switch. Digital pressure switch connected to AUX1 and COM, overpressure switch connected to AUX2 and COM.

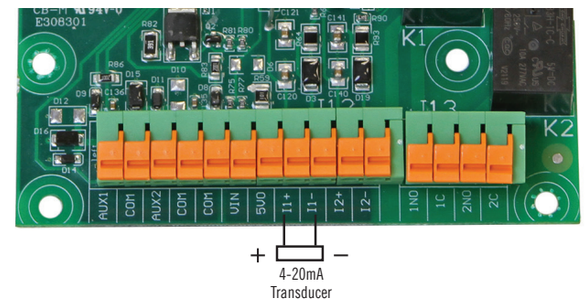

Connection Diagram for 4-20 mA Analog Transducer

A.Y. McDonald Mfg. Co.
AutoDRIVE Quick Start Guide - SD1 & SD3 Series

Step 5 Keypad & Display

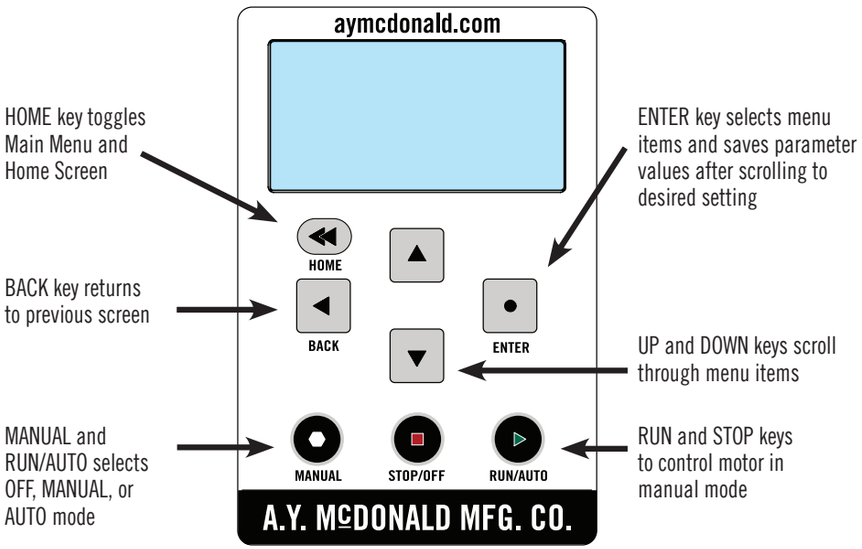

Manual Mode Operation

Operating the system in MANUAL mode on the keypad overrides signals from the pressures switches. Operating the system in this mode may lead to dangerous pressures in closed plumbing systems. The VFD will ramp up to MAX FREQUENCY (default 60hz) and run without input from the control terminals.

WARNING: It is unlawful in **CALIFORNIA & VERMONT (effective 1/1/2010); MARYLAND (effective 1/1/2012); LOUISIANA (effective 1/1/2013) and the UNITED STATES OF AMERICA (effective 1/4/2014)** to use any product in the installation or repair of any public water system or any plumbing in a facility or system that provides water for human consumption if the wetted surface area of the product has a weighted average lead content greater than 0.25%. This prohibition does not extend to service saddles used in California, Louisiana or under USA Public Law 111-380.

Step 6 Constant Pressure Setup

Before initializing the drive be sure you have completed the following list

- The drive has been securely mounted with proper clearance around the unit
- Input, output, and pressure switch/transducer wiring are all completed
- All plumbing is completed, and the system is ready to be pressurized

Upon the first initialization of the unit (or after restoring factory defaults of all parameters using the two-button reset procedure, simultaneously press the ENTER and BACK buttons for three seconds and then confirming you would like to reset the drive) the drive will enter into the following set of questions in order to setup the constant pressure system.

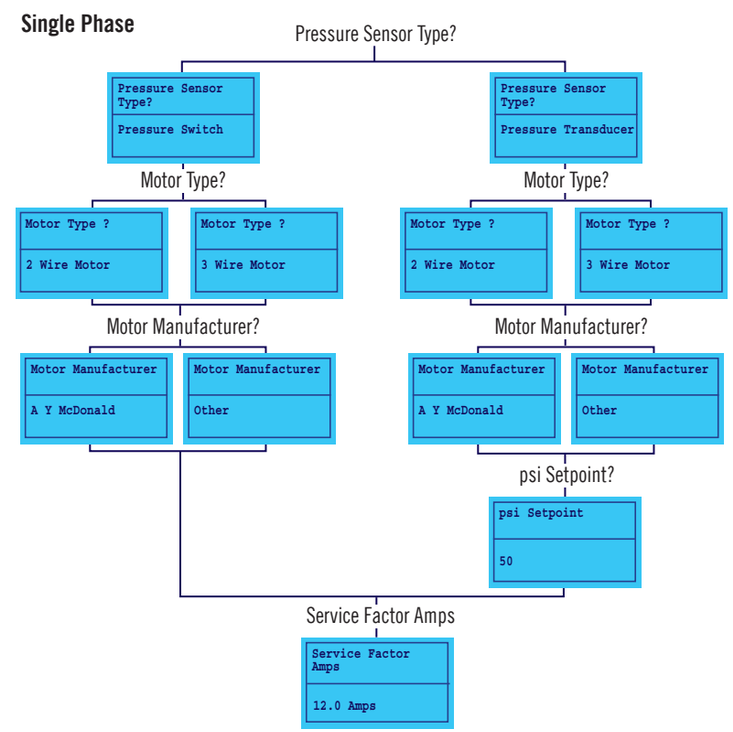

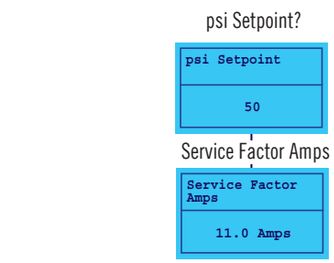

Once the drive is initiated, press the RUN/AUTO button to run in Auto mode. If you would like to further customize the drive, you can enter the menu by pressing the home button and using the arrows to navigate the menus. For more information, consult the manual that is included with each AutoDRIVE.